HOOD TYPE DISHWASHERS
AM SERIES

HOBART

Hood Type Pass Through Dishwasher — AMXW-10B

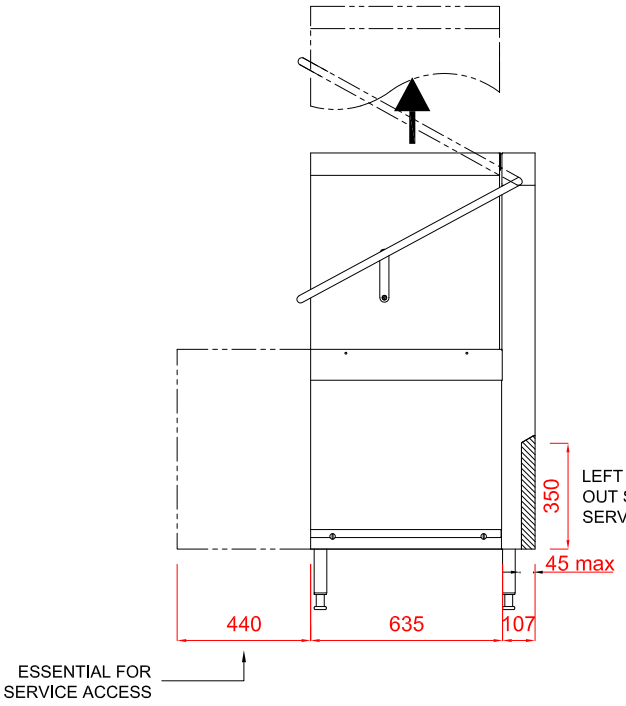

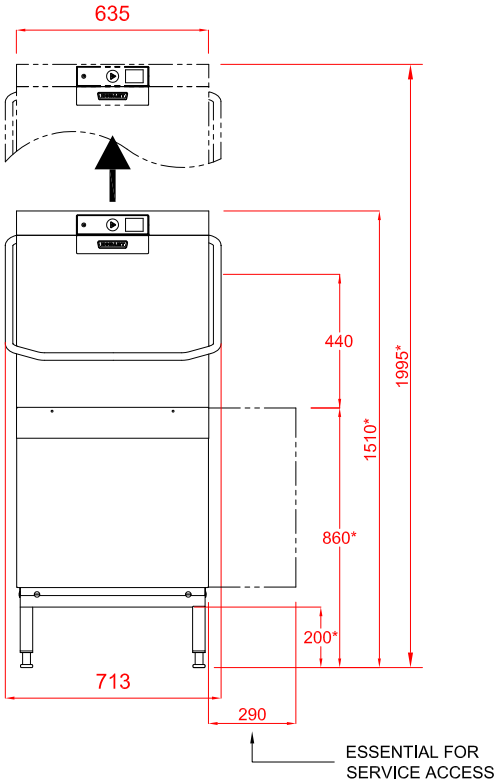

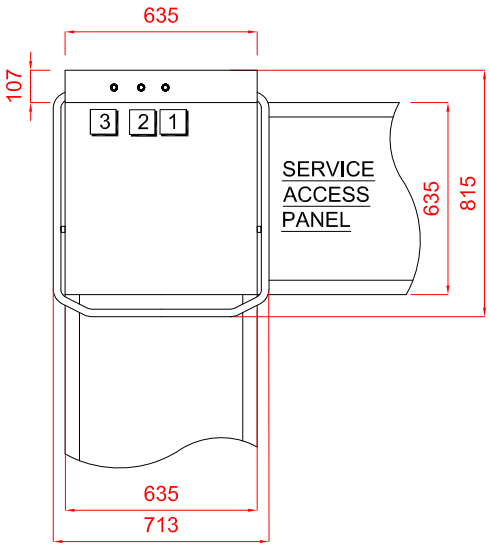

1 Water

22mm CONNECTION VIA 2 METRE FLEXIBLE HOSE, FEMALE TERMINATION.

WATER SUPPLY 60°C (2° TO 8° CLARK MAX) @ 0.8 TO 10.0 BAR MAX. INITIAL TANK FILL 23 LITRES.

RINSE WATER USAGE 2.0 LITRES PER CYCLE. MAX USAGE 120 LITRES PER HOUR.

OUR MACHINES ARE SUPPLIED WITH CLASS 'AB' AIR GAP AS STANDARD.

2 Drain

DRAIN - 2 METRE FLEXIBLE HOSE TO A 40 mm TRAPPED STANDPIPE 500mm MAX A.F.F.L.

FLOW RATE 30 LITRES PER MINUTE. DRAIN RATE TYPICALLY 3 MINUTES.

Other Services

RINSE AGENT HOSE - 2.5 METRE FLEXIBLE.
DETERGENT HOSE - 2.5 METRE FLEXIBLE.

3 Electric

7.1kW 400/50/3 + N + E FUSED AT 16amps / PHASE.
MACHINE SUPPLIED WITH 2.5 METRES OF CABLE (3 PHASE).
CONFIGURABLE TO:
5.0kW 230/50/1 FUSED AT 25amps

Notes

Approx Weights: EMPTY: 110kg WITH WATER: 130kg
Min distance to Wall to Inside of tabling boxed edge 154.5mm.
HEIGHTS MARKED * REPRESENT ±20mm.

PLOT SCALE: 1:25